NOTICE OF PROPRIETARY RIGHTS THIS DOCUMENT CONTAINS CONFIDENTIAL TECHNICAL DATA, INCLUDING TRADE SECRETS, PROPRIETARY TO TIMES MICROWAVE SYSTEMS. DISCLOSURE OF THIS DATA IS EXPRESSLY CONDITIONED UPON YOUR ASSENT THAT ITS USE IS LIMITED TO USE WITHIN YOUR COMPANY ONLY. ANY OTHER USE IS STRICTLY PROHIBITED WITHOUT THE PRIOR WRITTEN CONSENT OF TIMES MICROWAVE SYSTEMS.

SYM	REVISION DESCRIPTION	DFTM	DATE	APPD	DATE
A	RELEASED FOR PRODUCTION	D.J.H.	12/12/12	J.D.B.	12/12/12

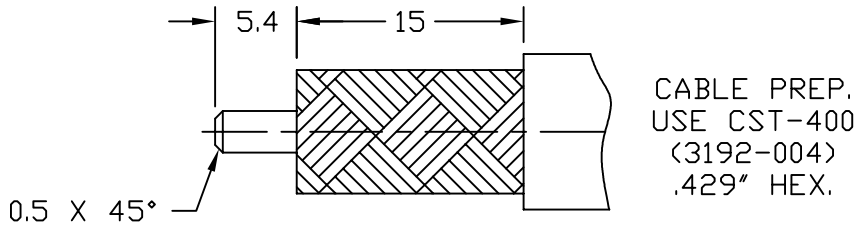

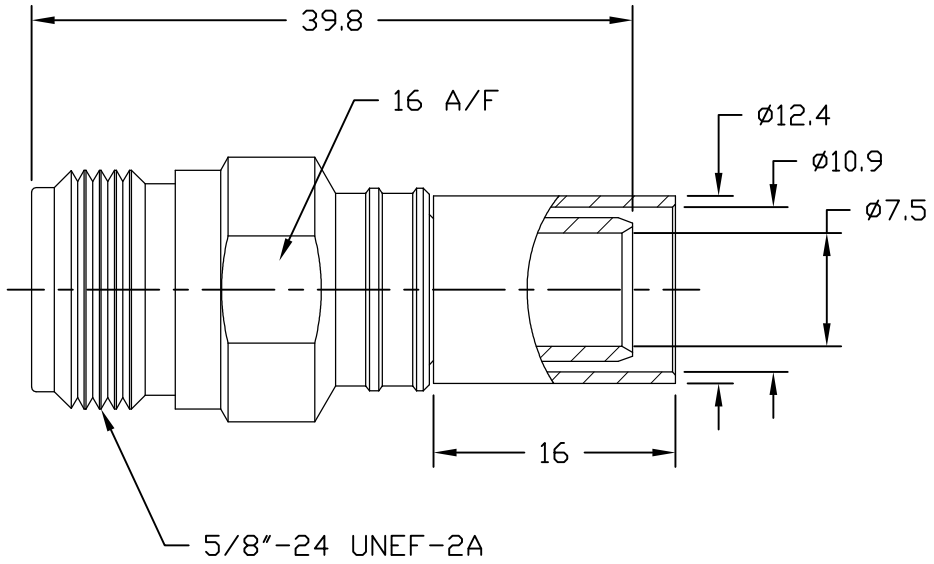

Reference Standard IEC60169-16

I. Electric Performance

Nominal Impedance(Ω):	50
Frequency Range:	DC-6GHz
VSWR:	≤1.30
Insert Loss(dB):	≤ 0.1(0-3GHz)
Insulation resistance(MΩ)	≥5000
Proof Voltage(V)	1500
Conductor resistance(mΩ)	outer conductor <0.4
	inner conductor <0.8

II. Mechanical Performance

Retention	≥0.56N
Mechanical Wear(hypo-)	500
Tensile force(cable-connector)	400N
Torsion(cable-connector)	2N.m

III. Material and plating

Component	Material	Plating
Inner conductor	Spring Bronze	Au 1.27μm over Chemistry Nickel 3μm
Outer conductor	Brass	Copper-tin-zinc 2μm
Tube	Copper	Copper-tin-zinc 2μm
Insulator	PTFE	

IV. Environment

Temp. range	-55℃~+155℃
Weather standard	IEC 60068 55 / 155/ 56
Thermal shock	US MIL-STD 202,Meth.107,Cond.B
Vibration	US MIL-STD 202,Meth.204,Cond.B
Shock	US MIL-STD 202,Meth.213,Cond.I
ROHS Compliant	

V. Assembly: inner conductor installed and outer conductor crimped

MATL:	UNLESS OTHERWISE SPECIFIED	DFTM. D. J. H.	TIMES MICROWAVE SYSTEMS
	ALL DIMENSIONS ARE IN mm MACHINED SURFACES FINISH N/A RMS MAX. REMOVE ALL BURRS N/A MAX. BREAK MACHINE CORNERS N/A MAX. FILLET R. TOLERANCES ON DECIMALS .XX ± N/A .XXX ± N/A ANGLES ± 1° FRACTIONS ± N/A	DATE 12/12/12	**EZ-400-NF-X**
USED ON: 0-1		CHKD. J. D. B.	N FEMALE FOR LMR-400 CABLE
		DATE 12/12/12	EZ/CRIMP/NO BRAID TRIM
		APPD. J. D. B.	
SCALE: N/A	DWG. SIZE A DO NOT SCALE DRAWING CODE IDENT 68999	DATE 12/12/12	SHT. 1 of 1 SD3190-2818 REV. A